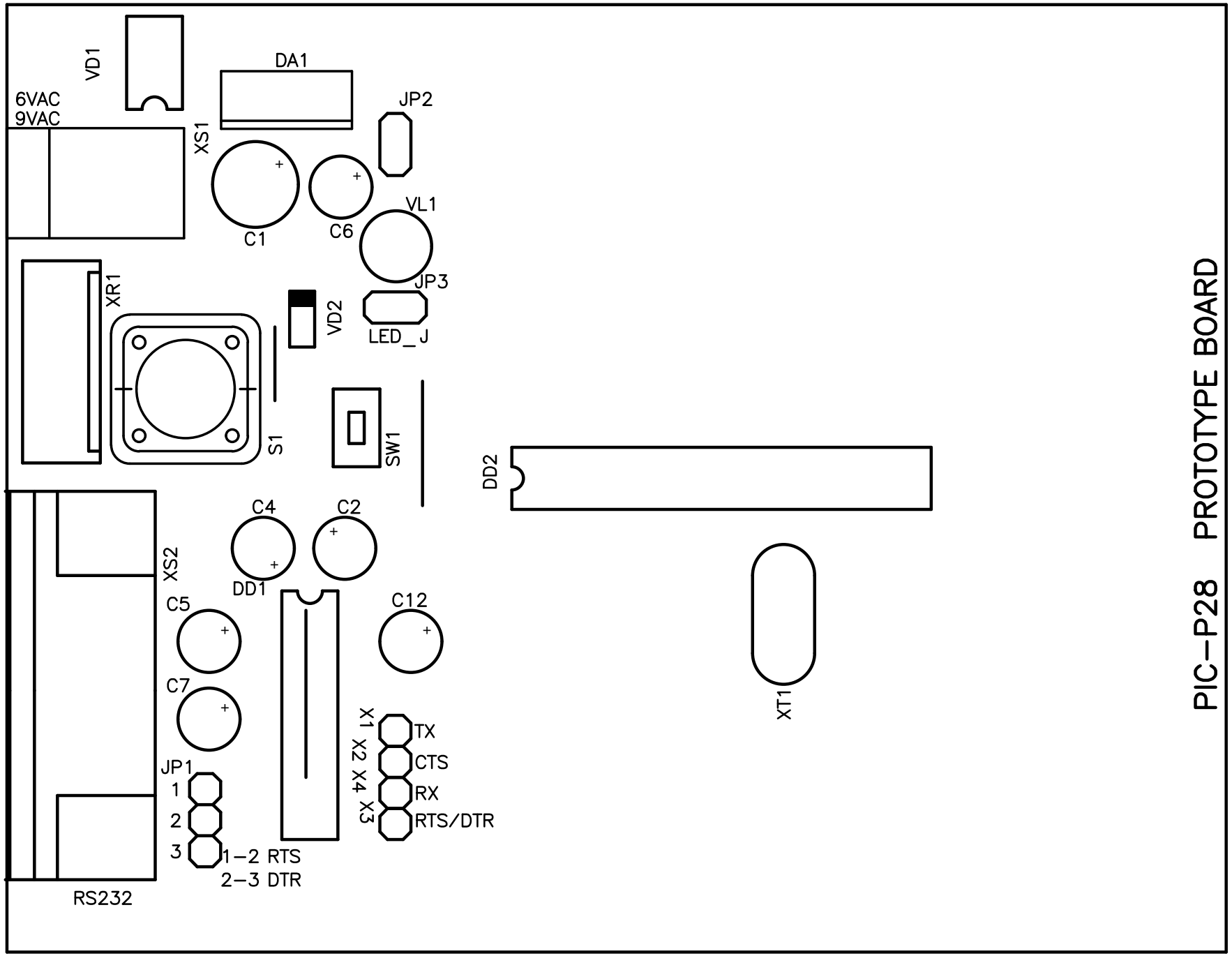

PIC–P28 PROTOTYPE BOARD