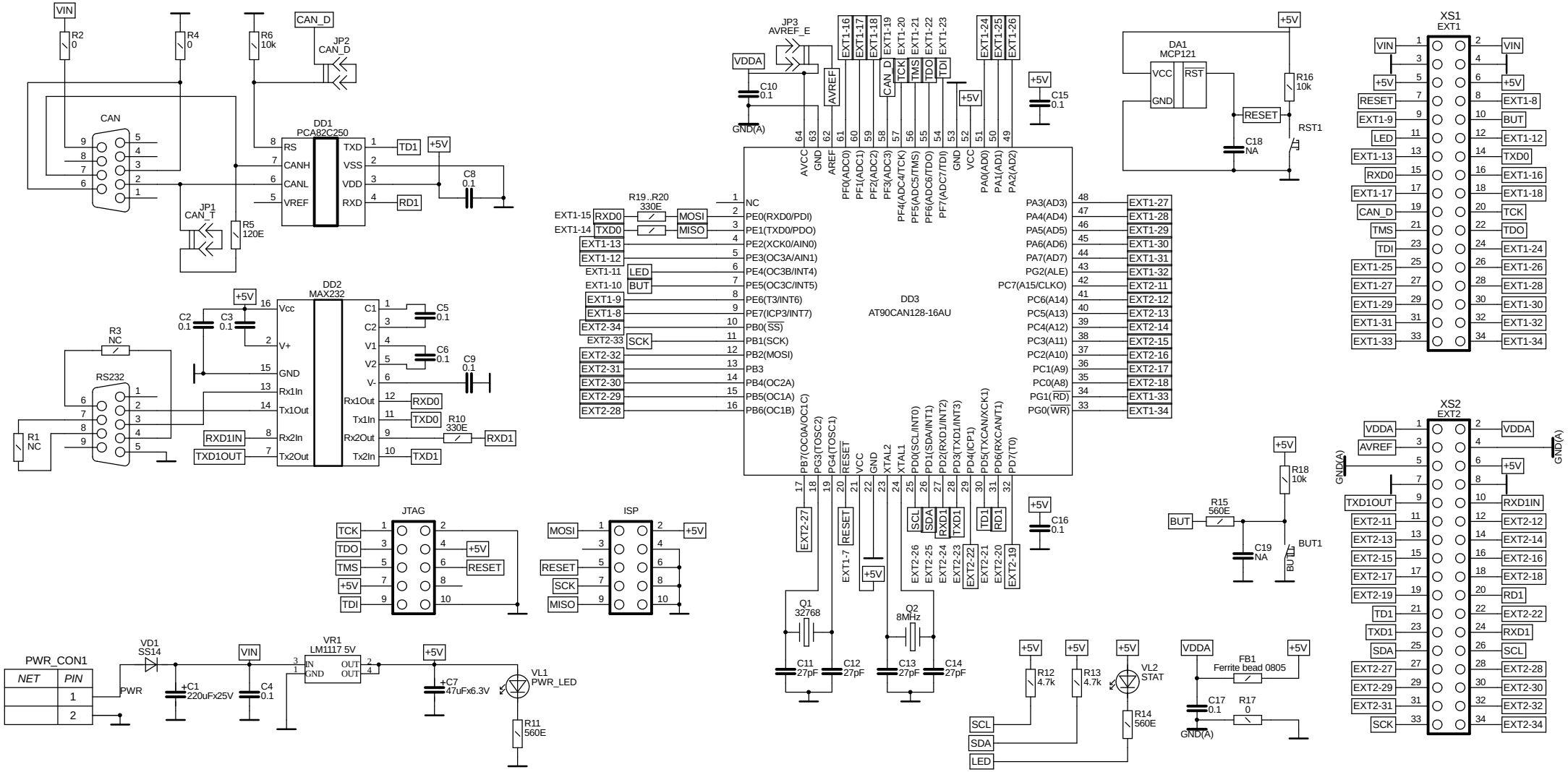
VIN
R2 0
R4 0
R6 10k
CAN_D
JP2 CAN_D
CAN
DD1 PCA82C250
RS
CANH
CANL
VREF
TXD
VSS
VDD
RXD
TD1
RD1
+5V
C8 0.1
JP1 CAN_T
R5 120E
DD2 MAX232
Vcc
V+
GND
Rx1In
Tx1In
Rx2In
Tx2In
C1
C2
V1
V2
V-
Rx1Out
Tx1Out
Rx2Out
Tx2Out
C2 0.1
C3 0.1
C5 0.1
C6 0.1
C9 0.1
R3 NC
RS232
R1 NC
RXD1IN
TXD1OUT
RXD0
TXD0
R10 330E
RXD1
JTAG
TCK
TDO
TMS
TDI
RESET
ISP
MOSI
SCK
MISO
JP3 AVREF_E
VDDA
C10 0.1
GND(A)
AVREF
EXT1-16
EXT1-17
EXT1-18
EXT1-19
EXT1-20
EXT1-21
EXT1-22
EXT1-23
EXT1-24
EXT1-25
EXT1-26
C15 0.1
DA1 MCP121
VCC
RST
GND
R16 10k
RST1
C18 NA
XS1 EXT1
XS2 EXT2
R19..R20 330E
EXT1-15
EXT1-14
EXT1-13
EXT1-12
EXT1-11
EXT1-10
EXT1-9
EXT1-8
EXT2-34
EXT2-33
EXT2-32
EXT2-31
EXT2-30
EXT2-29
EXT2-28
LED
BUT
DD3 AT90CAN128-16AU
NC
PE0(RXD0/PDI)
PE1(TXD0/PDO)
PE2(XCK0/AIN0)
PE3(OC3A/AIN1)
PE4(OC3B/INT4)
PE5(OC3C/INT5)
PE6(T3/INT6)
PE7(ICP3/INT7)
PB0(SS)
PB1(SCK)
PB2(MOSI)
PB3
PB4(OC2A)
PB5(OC1A)
PB6(OC1B)
PB7(OC0A/OC1C)
PG3(TOSC2)
PG4(TOSC1)
RESET
VCC
GND
XTAL2
XTAL1
PD0(SCL/INT0)
PD1(SDA/INT1)
PD2(RXD1/INT2)
PD3(TXD1/INT3)
PD4(ICP1)
PD5(TXCAN/XCK1)
PD6(RXCAN/T1)
PD7(T0)
PA3(AD3)
PA4(AD4)
PA5(AD5)
PA6(AD6)
PA7(AD7)
PG2(ALE)
PC7(A15/CLKO)
PC6(A14)
PC5(A13)
PC4(A12)
PC3(A11)
PC2(A10)
PC1(A9)
PC0(A8)
PG1(RD)
PG0(WR)
Q1 32768
C11 27pF
C12 27pF
Q2 8MHz
C13 27pF
C14 27pF
C16 0.1
R15 560E
C19 NA
R18 10k
BUT1
R12 4.7k
R13 4.7k
VL2 STAT
R14 560E
FB1 Ferrite bead 0805
C17 0.1
R17 0
PWR_CON1
NET
PIN
PWR
VD1 SS14
+C1 220uFx25V
C4 0.1
VR1 LM1117 5V
IN
OUT
GND
+C7 47uFx6.3V
VL1 PWR_LED
R11 560E

AVR-CAN