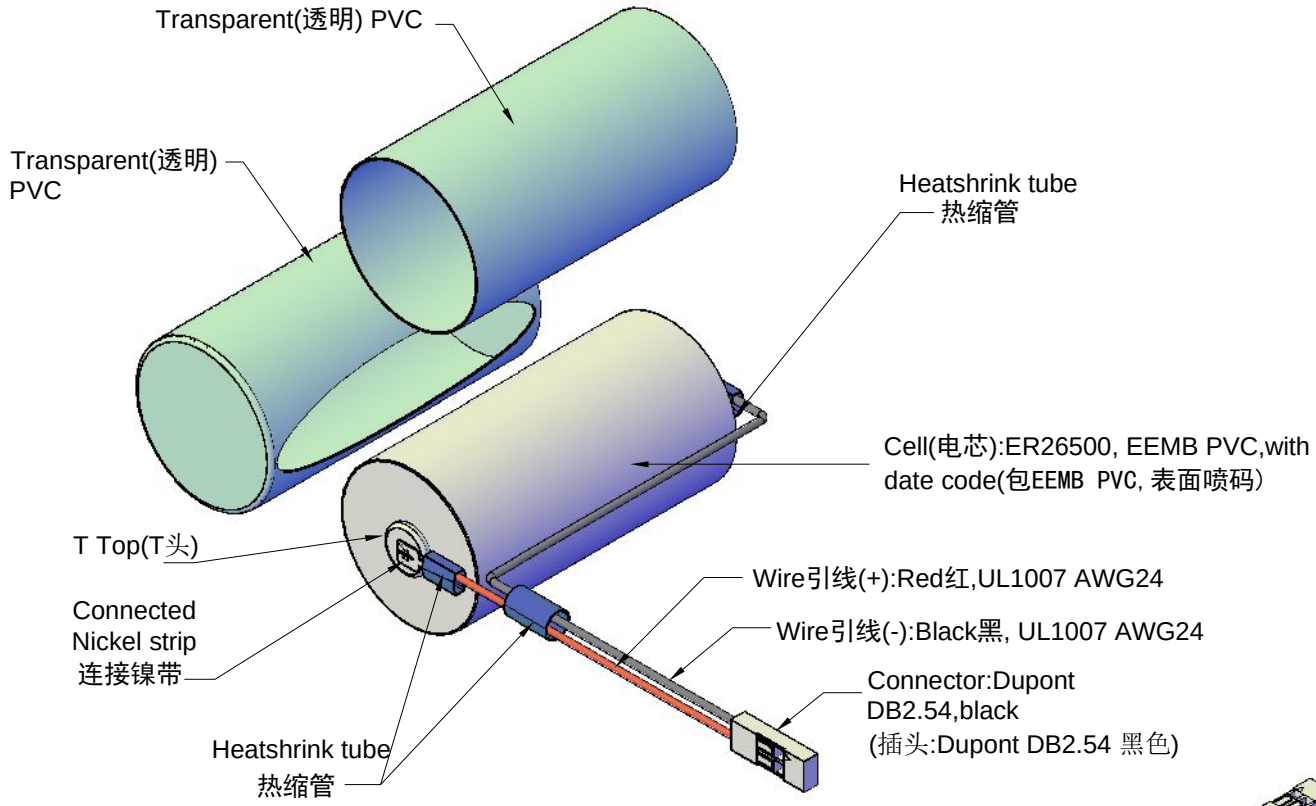

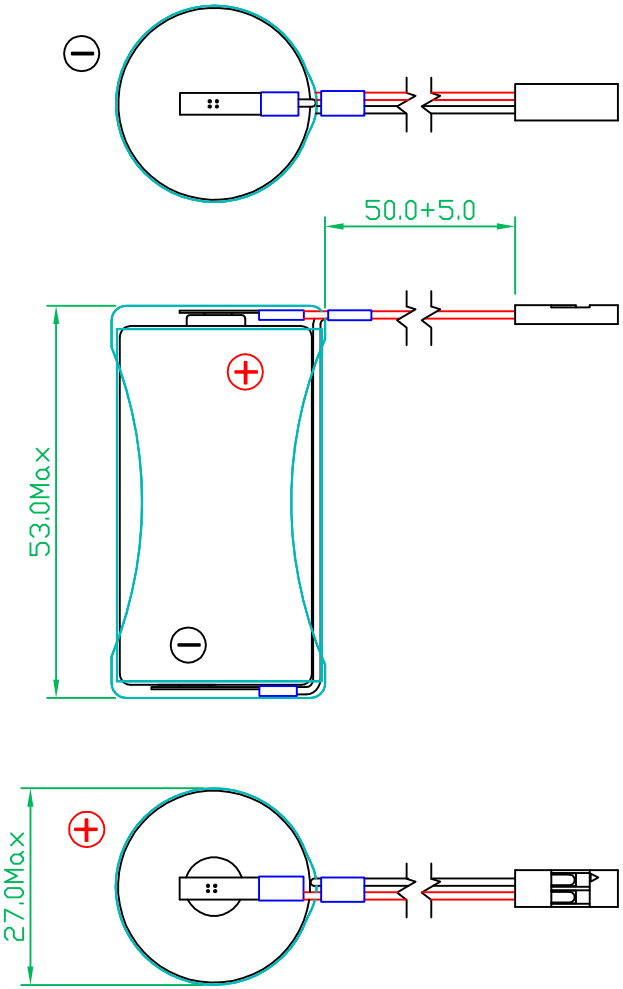

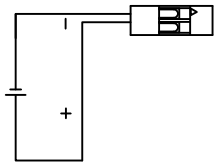

Circuit diagram

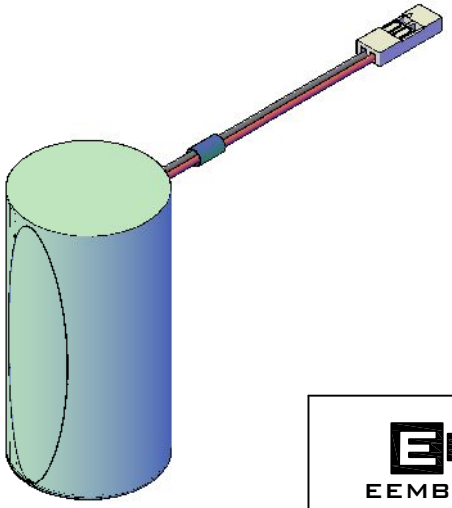

Remark(备注):

1.Pack :3.6V 9000mAh,With wires and Connector,Transparent PVC.
Fix lead wire by erect PVC tube and then cover the whole battery with horizontal PVC tube
电池包:3. 6V 9000mAh. 带输出引线及插头, 包透明PVC. 先用竖套PVC固定引线, 再用横套PVC将整体包住

2. RoHS Compliant.
严格按照RoHS要求生产.

EEMB BATTERY		Drawn:	YanF	Revise No.:	E4-2009
		Group:	Group1	Projection:	
		Approved1:		Page:	1/1
Title	ER26500-LD/	Approved2:		Scale:	1 : 1
File NO.	A17619	Draw Date:	2019/09/19	Unit:	mm