D1RFRD006

REVISION RECORD				
REV	ECN	DESCRIPTION	DRFT	DATE
1		增加CE和UL刻字	Yej	05/14/07"
2		依客户要求增加11.0尺寸标注	Hang	07/05/07"
3		品名、料号加（H）	Yej	03/21/08"
4		增加VDE及CQC刻字	LJH	03/23/09"
5		锌柱、螺丝工程变更	WLM	04/02/09"
6	10-0138	弹片料号由"X000000230"改为"X000000260"	PengWu	05/21/10"

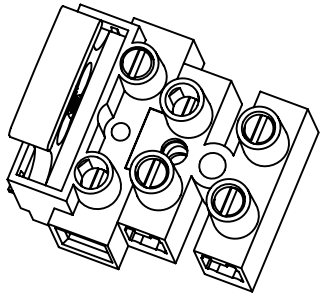

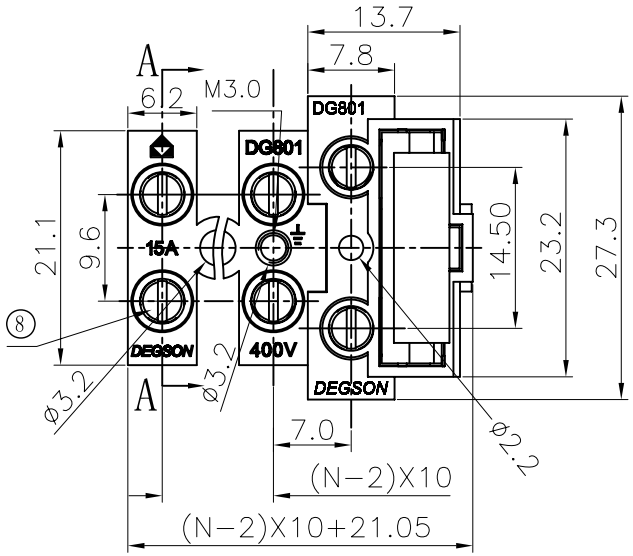

Notes:

1. Pitch:10.0mm ,Poles:1-5P
2. Rated voltage/current:UL 300V/6.3A
   VDE 250V/6.3A
3. Operation temperatures:-40℃～+105℃
4. Withstanding Voltage:AC2000V/1Min
5. Insulation Resistance:5000MΩ/DC1000V
6. Wire Range:22～14AWG,2.5mm²
7. Max.Torque Value:M3,5.10kgf.cm

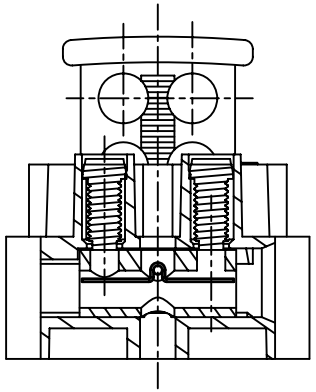

SECTION A-A

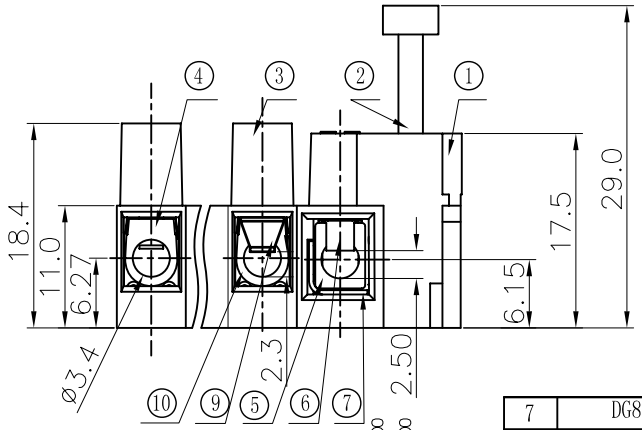

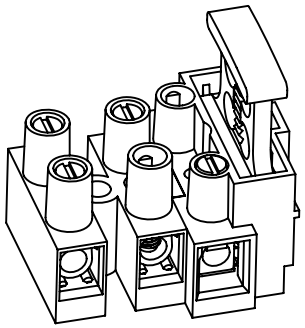

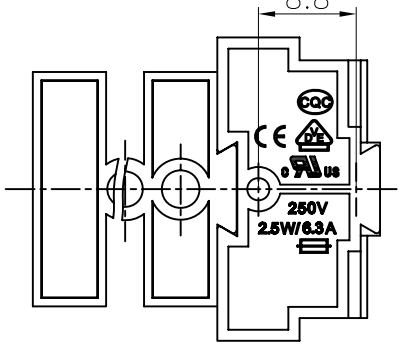

ITEM	NAME OF PART	NO. OF PART	Q"TY	MATERIAL	NOTES
7	DG801-Clamp	X000000420(H)	2	Phosphor Bronze	Ni plated
6	DG801-Spring	X000000190(H)	2	Stainless Steel	
5	DG801 Brass Cage	X000000180(H)	2	Brass	Ni plated
4	10HWP Current carrier	X000000050(H) 5	XX-2	Brass	Ni plated
3	DG801 Holder	2007A0Y(XX-1)A(H)	1	PA66	UL94V-0
2	DG801 Hand	2007D0301A(H)	1	PA66	UL94V-0
1	DG801 Base	2007C0Y01A(H)	1	PA66	UL94V-0
10	DG801-Current-Carrier	X000003320(H) 5	1	Brass	Ni plated
9	DG305-Spring	X000000260(H)	2	Stainless Steel	
8	10HS"—"Screw	S000003000(H) 5	2*XX	Steel	$Cr^{3+}Zn$

6

DETACHED LISTS

MM (INCH)

TOLERANCES EXCEPT AS NOTED

MM	
0~30	± 0.25
30~60	± 0.30
60~100	± 0.50
100~150	± 0.70
150以上	± 1.00

ANGLES ± 1°

THIRD ANGLE PROJECTION

DFTO Zhuwn	DATE 05/19/06"	
CHKD	DATE	
MFO	DATE	
APPVL	DATE	
MATERIAL :		
G.E :		
FINISH :		
SCALE : 1:1		

DEGSON®

宁波高正电子有限公司
DEGSON ELECTRONICS CO., LTD

NAME (NEW)
DG801-XXP-1Y-00A(H)

DRAWING NO. DG801-E01
/PART NO.

SIZE A3 | REV T6 05/21/10"

DO NOT SCALE DRAWING

SHEET 1 OF 1